*** SCI PRODUCT CUT SHEET ***

REV-001	APPROVED FOR PRODUCTION 1/18/25
REV-002	SCI BUSINESS ADDRESS CHANGE 12/08/25

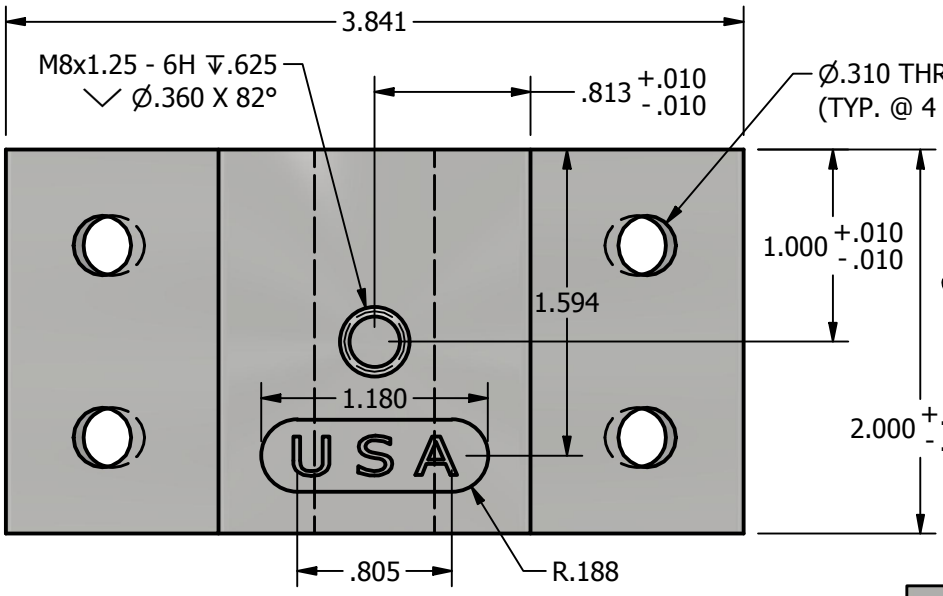

TOP VIEW

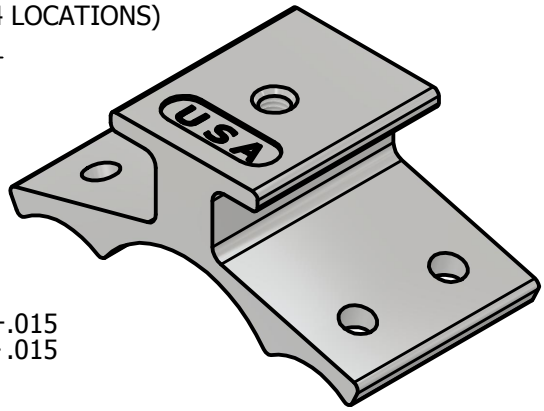

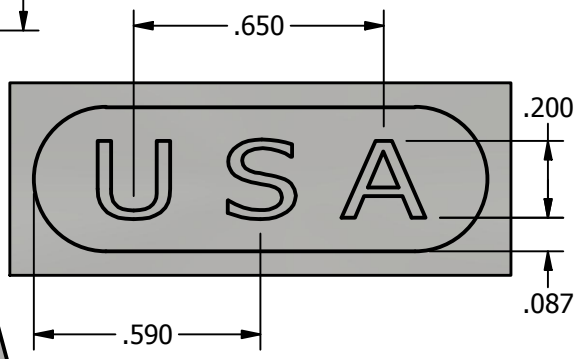

LOGO DETAIL

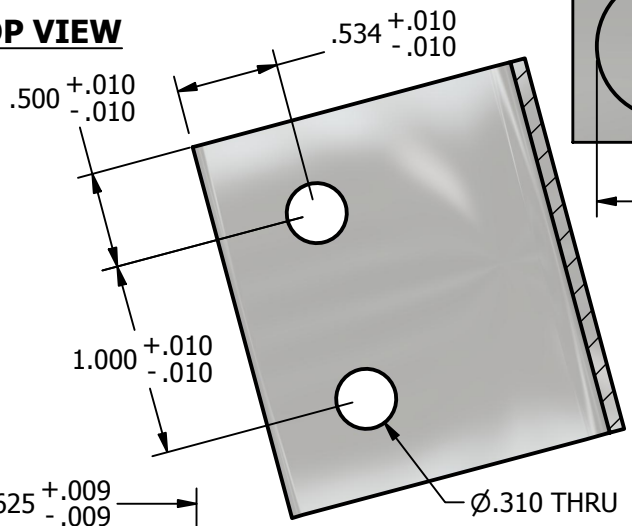

SECTION A-A

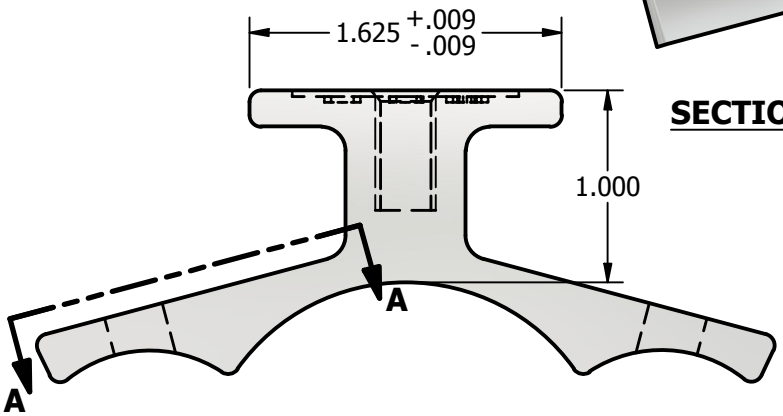

PROFILE VIEW

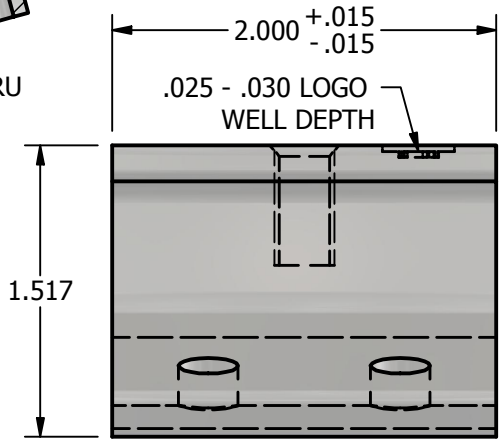

LEFT VIEW

NOTES:

1. FOR CLARITY THIS DRAWING IS NOT TO SCALE.
2. CONTACT THE MANUFACTURER FOR RECOMMENDED LAYOUTS, SPACING AND ADDITIONAL DETAILS.
3. INSTALLATION MUST BE COMPLETED WITH THE MANUFACTURERS WRITTEN SPECIFICATIONS AND INSTALLATION INSTRUCTIONS.
4. THESE DRAWINGS ARE SUBJECT TO CHANGE WITHOUT NOTICE.

SOLAR CONNECTIONS INTERNATIONAL
YOUR PREMIER SOLAR ATTACHMENT SOLUTION

220 EXCHANGE DRIVE, UNIT B, CRYSTAL LAKE, IL 60014
PHONE: 800.815.7652 WEBSITE: WWW.SOLARCONNECTIONS.COM
FAX: 815.455.4367 E -MAIL: INFO@SOLARCONNECTIONS.COM

PM-PMR1S-USA | DIE: 10286

DRAWN BY:	rhoeffleur
DATE:	12/08/2025
SCALE:	N.T.S.
MATERIAL:	6061-T6 Aluminum

THE INFORMATION HEREIN IS CONFIDENTIAL AND PROPRIETARY AND IS NOT TO BE DISCLOSED OR DELIVERED TO THIRD PARTIES WITHOUT THE PRIOR WRITTEN CONSENT OF SOLAR CONNECTIONS INTERNATIONAL, INC.